Item	Name	Q.ty
1	CA.GRF.3095.GW	1
2	GRF30.VSX	1

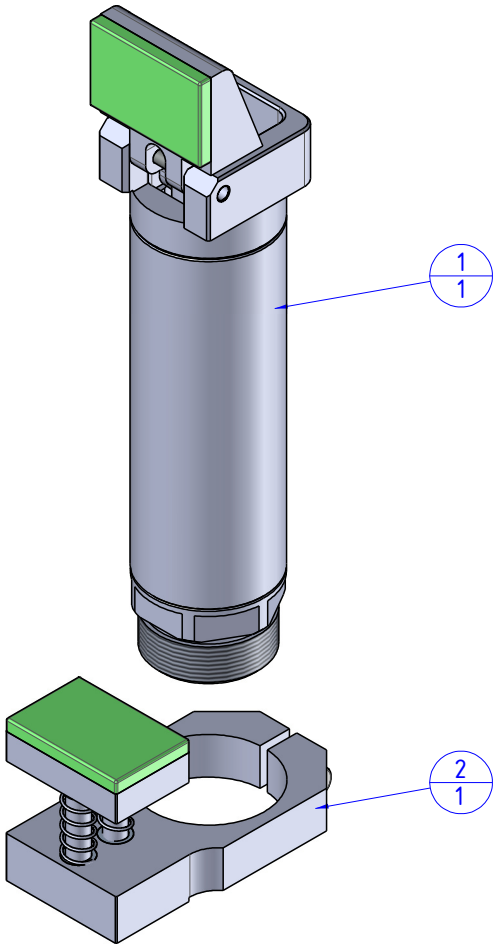

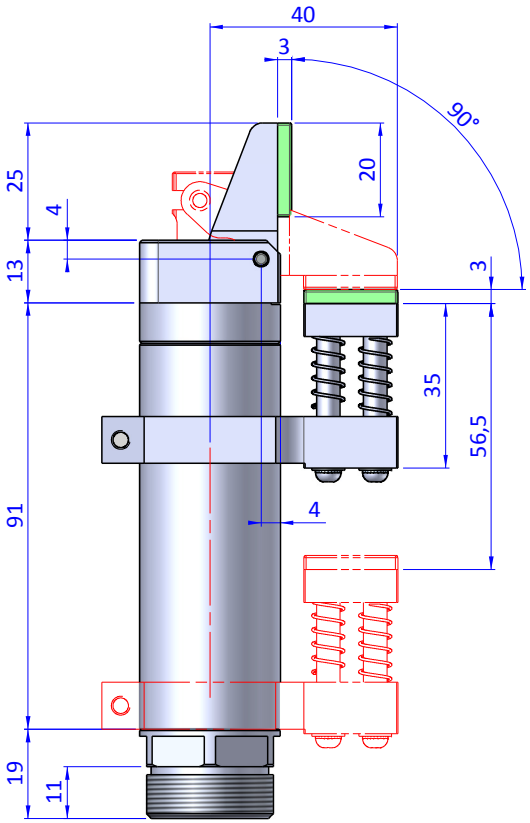

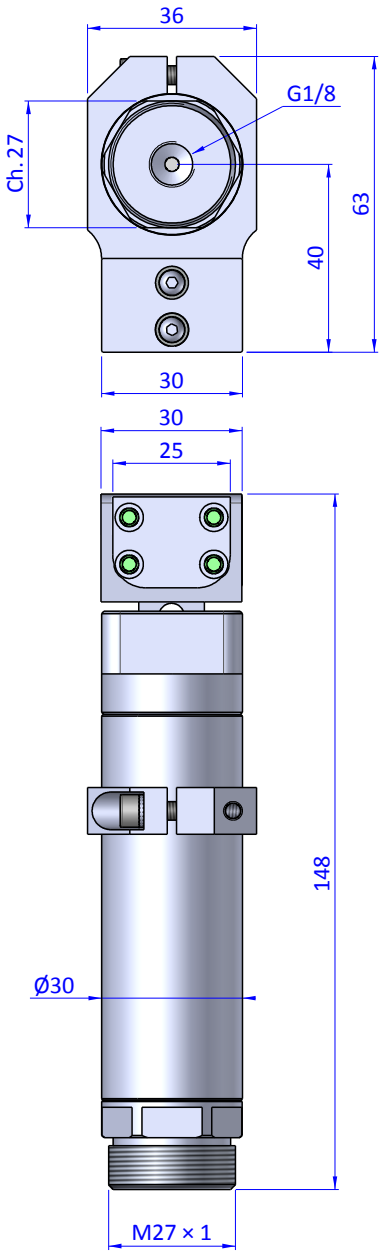

THE PROPERTY OF THE DRAWING IS ESTABLISHED BY LAW. IT IS FORBIDDEN TO PRODUCE OR SHOW IT TO THIRD PART WITHOUT A WRITTEN AGREEMENT

Format A3

UNI 936-76

FPS
FPSERVICES AUTOMATION

GENERAL TOLERANCE
UNI - ISO 2768
CLASSE f

DESCRIPTION
CA.GRF.3095.VSX

DESIGNED FROM
FPS Automation

REVIEW
A

DATE
10/04/2019

WEIGHT
0,292kg

CODE
CA.GRF.3095.VSX